Date: Monday, 3/5/2007 4:23:08 PM
User: Kim Johnston

Process Sheet

Customer	: CU-DAR001 Dart Helicopters Services	Drawing Name	: LATCH
Job Number	: 31020		
Estimate Number	: 12772		
P.O. Number	: N/A	Part Number	: 41232 200 002 003
This Issue	: 3/5/2007 S.O. No. : N/A	Drawing Number	: 41232-200-002 REV A
Prsht Rev.	: NC	Project Number	: N/A
First Issue	: N/A Type : MACHINED PARTS	Drawing Revision	: A
Previous Run	: N/A	Material	: N/A
Written By	:	Due Date	: 3/30/2007 Qty: 12 Um: Each
Checked & Approved By	: 07.03.06		
Comment	: Est Rev:A New Issue 07-03-05 JLM		

Additional Product

Job Number:

Seq. #:	Machine Or Operation:	Description :
1.0	M2024T3R~~1.250~~ 1.875"	2024-T3 Round Bar 1.250"
	Comment: Qty.: 0.3675 f(s)/Unit Total : 4.4100 f(s) 07-02-09. 2024-T3 Round Bar ~~1.250"~~ 1.875" Batch: M17892.	
2.0	LATHE CONV.	CONVENTIONAL LATHE
	Comment: CONVENTIONAL LATHE Turn as per Dwg 41232-200-0021 07-03-15	
3.0	QC2	INSPECT PARTS AS THEY COME OFF MACHINE
	Comment: INSPECT PARTS AS THEY COME OFF MACHINE 07-03-15	
4.0	MILLING CONV.	CONVENTIONAL MILLING MACHINE
	Comment: CONVENTIONAL MILLING MACHINE Mill as per Dwg 41232-200-002 07-03-15	
	2-Deburr 07-03-15	
5.0	QC2	INSPECT PARTS AS THEY COME OFF MACHINE
	Comment: INSPECT PARTS AS THEY COME OFF MACHINE 07-03-15	
6.0	QC8	SECOND CHECK
	Comment: SECOND CHECK 07-03-16	

Dart Aerospace Ltd

W/O:		WORK ORDER CHANGES					
DATE	STEP	PROCEDURE CHANGE	By	Date	Qty	Approval Chief Eng / Prod Mgr	Approval QC Inspector

Part No: _____ **PAR #:** _____ **Fault Category:** _____ **NCR:** Yes (No) **DQA:** ED **Date:** 07/04/13

QA: N/C Closed: _____ **Date:** _____

NCR:		WORK ORDER NON-CONFORMANCE (NCR)						
DATE	STEP	Description of NC Section A	Corrective Action Section B			Verification Section C	Approval Chief Eng	Approval QC Inspector
			Initial Chief Eng	Action Description Chief Eng	Sign & Date			

NOTE: Date & initial all entries

Date: Monday, 3/5/2007 4:23:08 PM
User: Kim Johnston

Process Sheet

Customer: CU-DAR001 Dart Helicopters Services **Drawing Name:** LATCH

Job Number: 31020 **Part Number:** 41232 200 002 003

Job Number:

Seq. #:	Machine Or Operation:	Description :
7.0	OUTSIDE SERVICE	OUTSIDE SERVICES

Comment: Sub-Contracting PURCHASING
Issue P/O: 3360 CL07/03/20 (9)
Black Anodize as per Dwg 41232-200-005
Ensure Certificate of Conformity is attached

8.0	PACKAGING 1	PACKAGING RESOURCE #1

Comment: PACKAGING RESOURCE #1
Receive & Inspect For Transit Damage
Ensure certificate of conformity is attached 04/03/27 (9)

9.0	QC3	INSPECT POWDER COAT/CHEMICAL CONVERSION

Comment: INSPECT POWDER COAT/CHEMICAL CONVERSION SB 07/04/03 (9)

10.0	PACKAGING 1	PACKAGING RESOURCE #1

Comment: PACKAGING RESOURCE #1
Identify and Stock
Location: O A SD 07/04/03 (9)

11.0	QC21	FINAL INSPECTION/W/O RELEASE

(9)

Comment: FINAL INSPECTION/W/O RELEASE 07/04/13

Job Completion

07.04.13

Form: mprocess

Dart Aerospace Ltd

W/O:		WORK ORDER CHANGES					
DATE	STEP	PROCEDURE CHANGE	By	Date	Qty	Approval Chief Eng / Prod Mgr	Approval QC Inspector

Part No: _____ **PAR #:** _____ **Fault Category:** _____ **NCR:** Yes No **DQA:** _____ **Date:** _____

QA: N/C Closed: _____ **Date:** _____

NCR:		WORK ORDER NON-CONFORMANCE (NCR)						
DATE	STEP	Description of NC Section A	Corrective Action Section B			Verification Section C	Approval Chief Eng	Approval QC Inspector
			Initial Chief Eng	Action Description Chief Eng	Sign & Date			
0704-02	7.0	Parts were Anodized per Mil-A-8625F1-Type1-class2 Per QS1017, instead of Mil-A-8625-TypeIII-class2 Per Dwg.	07.04.13	Parts Acceptable per Eng. Approval. As per Bill.		0704-02	as per QS1042 07.04.13	0704-02

NOTE: Date & initial all entries

REVISION					
LETTER	DFTSMAN	DATE	DESCRIPTION	APPROVED	DATE
A	DNN	2/17/03	ADDED SMOOTH EDGES TO −001 & −003; REDUCED LENGTH OF −003 BY .125"; ADDED DRAIN HOLE TO −001; INCREASED DIA. OF AFT SLOT ON −001. MINOR CHANGE - FAR 21.95 CHECK D. MURPHY 2/17/03		

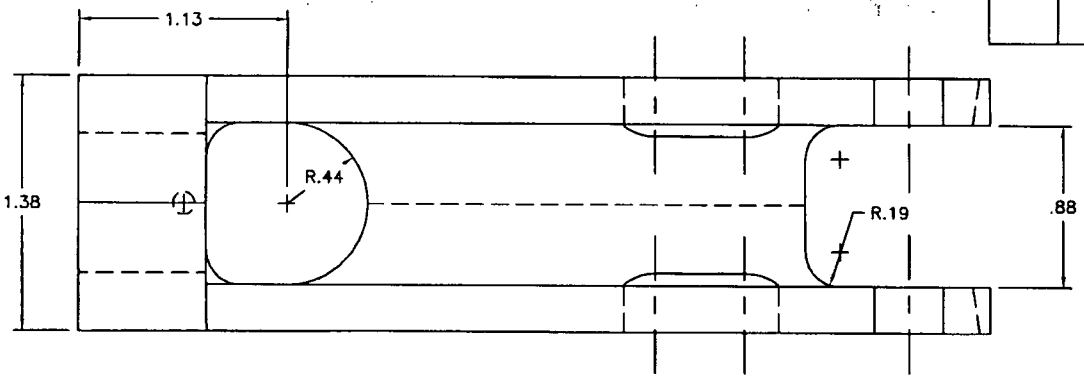

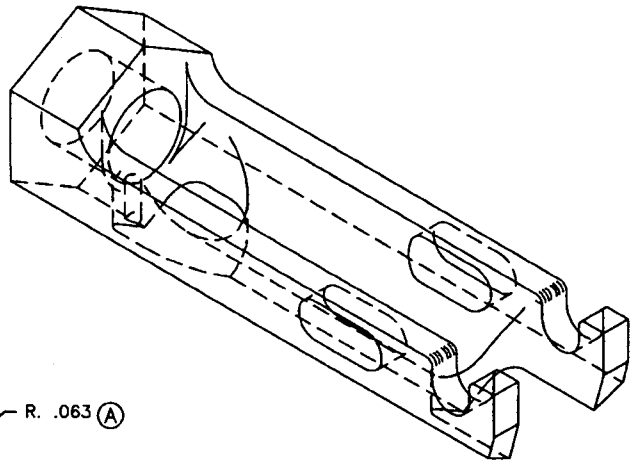

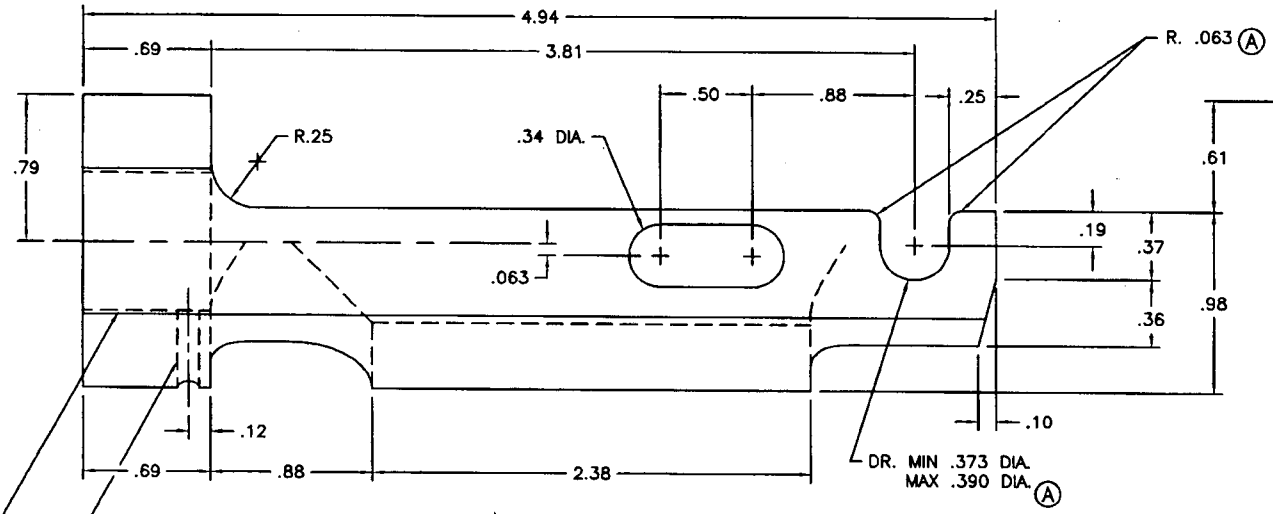

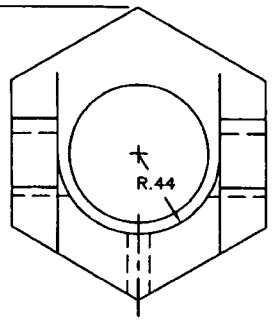

−001 TUBE

NO. REQ'D PER ASSY	PART NO.	NAME	STOCK SIZE	MATERIAL	MATL.SPEC	ZONE
1	MS21209F4−15	INSERT				
/	−005	PIVOT ARM (1)	1.00 DIA. x 3.56	2024−T4, T351 ALUM.		
	−003	LATCH (1)	1.11 x 3.50	2024−T4, T351 ALUM.		
	−001	TUBE (1)	1.38 HEX STK. x 4.94	2024−T4, T351 ALUM.		

LIST OF MATERIAL

(1) ANODIZE IN ACCORDANCE WITH MIL−A−8625, TYPE III, CLASS 2 DYED BLACK.

NOTE:

DASH NO.	REQ'D PER ASSY	NEXT ASSEMBLY
−003 −002 −001	2	41232−200−001

UNLESS OTHERWISE SPECIFIED X.±.1 XX.±.03 XXX.±.010 ANGLES ±.1/2°

DRFTSMN	D. NELSON	2/18/02
CHECK	D. MURPHY	2/18/02
STRESS		
PROJ. ENGR.		
HEAT TREAT		
FINISH (1)		

TITLE: STEP ACTUATOR COMPONENTS

DWG. SIZE: C SCALE: 2:1

Era Aviation, Inc.

DWG. NO. 41232−200−002 SHT 1 OF 3 REV. A

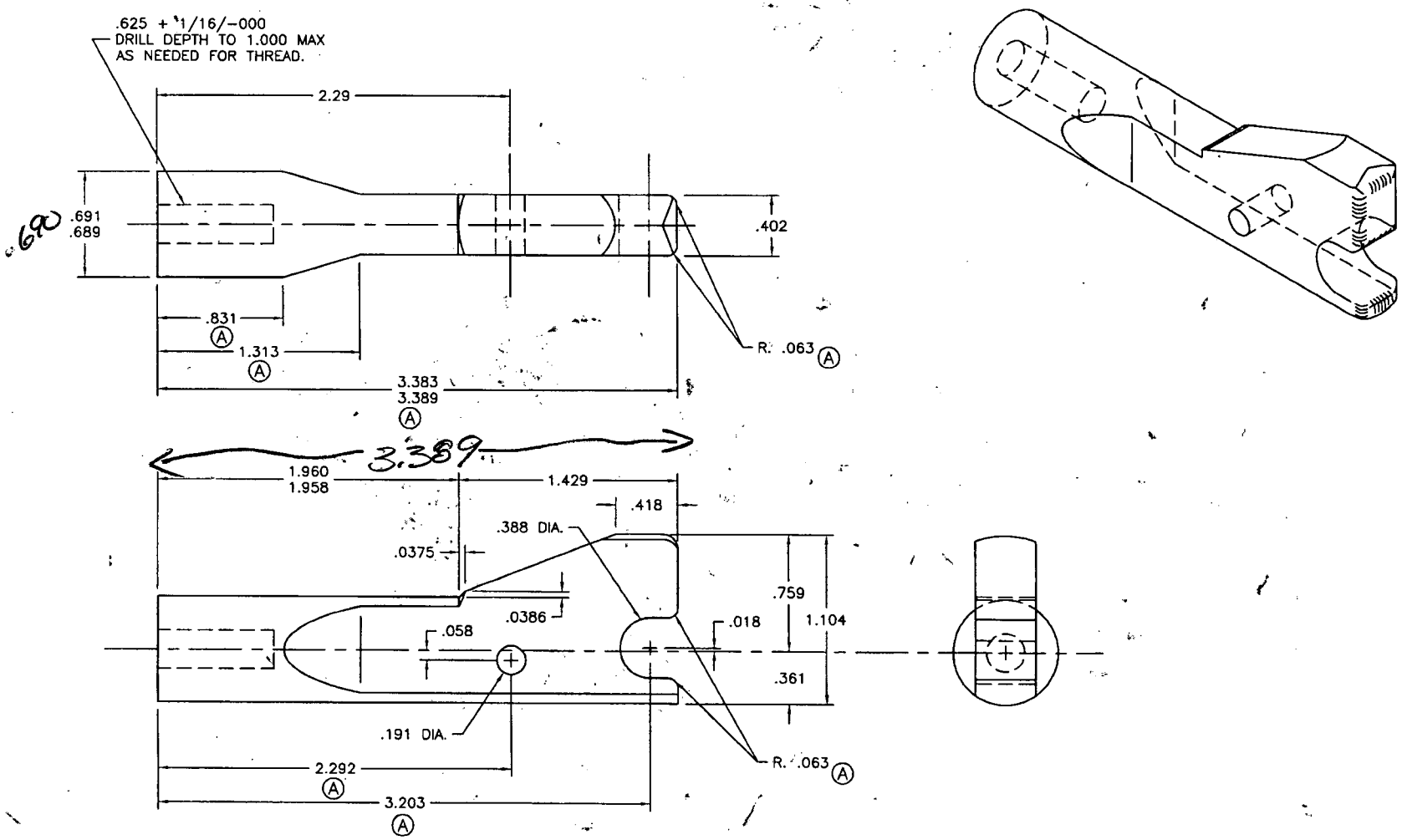

-003 LATCH

SHOP COPY
RETURN TO
ENGINEERING
UNCONTROLLED COPY
SUBJECT TO AMENDMENT
WITHOUT NOTICE
WORK ORDER
NO. 31020

Era Aviation, Inc.

TITLE	SIZE	DWG. NO.	REV.
STEP ACTUATOR COMPONENTS	C	41232-200-002 SHT 2 OF 3	A

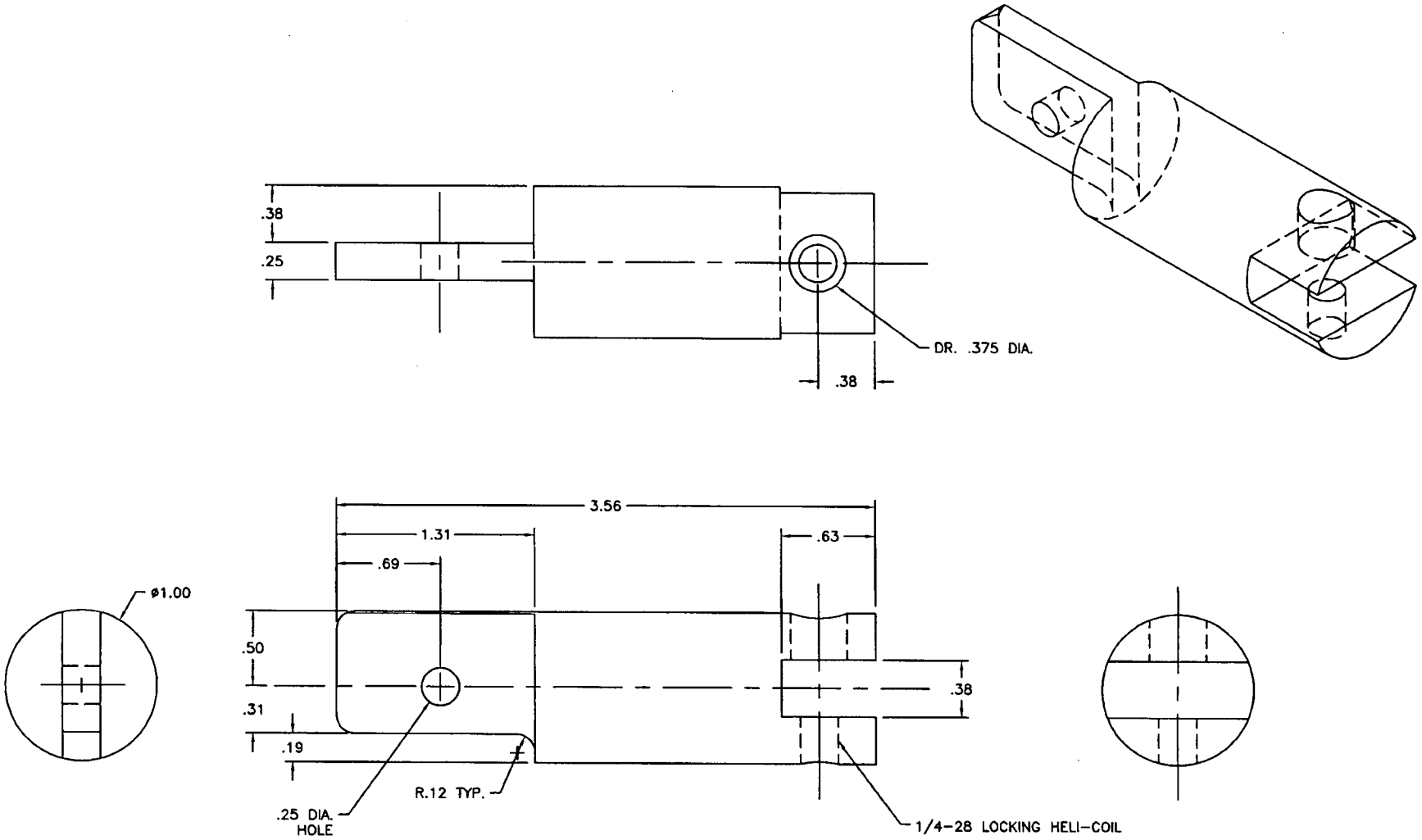

-005 PIVOT ARM

SHOP COPY
RETURN TO
ENGINEERING
UNCONTROLLED COPY
SUBJECT TO AMENDMENT
WITHOUT NOTICE
WORK ORDER
NO. 31020

Era Aviation, Inc.

TITLE	SIZE	DWG. NO.	REV.
STEP ACTUATOR COMPONENTS	C	41232-200-002 SHT 3 OF 3	A

DATE 2/26/04	ENGINEERING ORDER	E.O. No. B-1	SHT. 1 OF 1
BY D. NELSON	TITLE STEP ACTUATOR COMPONENTS	DWG. AFFECTED 41232-200-002	
APPROVED BY		SHEET AFFECTED SHT 1 & 3	

REASON FOR CHANGE: CHANGED DASH NO. OF INSERT ON L/M; CHANGED INSERT CALLOUT ON -005 PIVOT ARM.

MINOR CHANGE - FAR 21.95

IS	1	MS21209F4-10	INSERT
WAS	1	MS21209F4-15	INSERT

IS

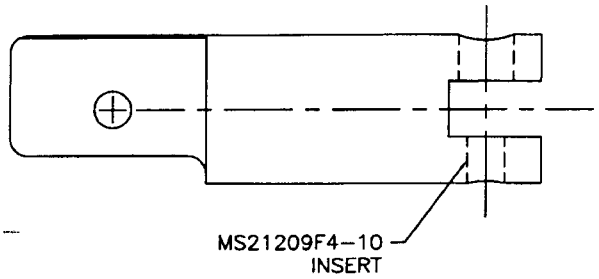

-005 PIVOT ARM

WAS

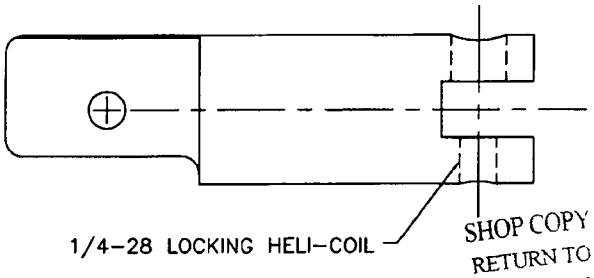

-005 PIVOT ARM

SHOP COPY
RETURN TO
ENGINEERING
UNCONTROLLED COPY
SUBJECT TO AMENDMENT
WITHOUT NOTICE
WORK ORDER
NO. 31020

CHANGE REQUIRED:	DATE:	BY:	YES	NO
TRAVELER				
INSTALLATION INSTRUCTIONS				
MAINTENANCE INSTRUCTIONS				
ILLUSTRATED PARTS				
UNINCORPORATED DRAWING LIST				
MASTER DRAWING LIST				
COMPUTER DATA BASE				

DART AEROSPACE LTD	Work Order:	
Description: Latch.	Part Number:	41232-200-002-003.
Inspection Dwg: 41232-200-003 Rev: A.		Page 1 of 1

FIRST ARTICLE INSPECTION CHECKLIST

[X] First Article [ ] Prototype

Drawing Dimension	Tolerance	Actual Dimension	Accept	Reject	Method of Inspection	Comments
.689	.689 → .691	.690	—			
.402	+/-.010.	.403	—			
1.313	+/-.010	1.315	—			
3.388	+/-.003.	3.389	—			
R.063	+/-.010	R.063	—			
.759	+/-.010.	.759	—			
1.104	+/-.010	1.106	—			
Ø.191	+.005 -.001	Ø.191	—			
Ø.388	+/-.010.	Ø.388	—			
.361	+/-.010.	.366	—			

Measured by:		Audited by:		Prototype Approval:	
Date:	07-03-16.	Date:	07-03-16	Date:	N/A.

Rev	Date	Change	Revised by	Approved
A		New Issue	KJ/RF	

TNM

ANODISATION et PEINTURE TNM INC.

21 chemin de l'Aviation, QC H9R 4Z2
Telephone: (514) 429-7777 Fax: (514) 429-5108
Certifié ISO 9001-2000 / ISO 9001-2000 certified
Certifié NADCAP / NADCAP certified

PACKING SLIP

54032

23-Mar-2007

CLIENT / CUSTOMER:

DART AEROSPACE LTD.
1270 ABERDEEN STREET
HAWKESBURY , ONTARIO
K6A 1K7

PURCHASE ORDER/ NO. DE COMMANDE: **00003360**

[redacted]

1	9	9	41232-200-002-003	B31020
2	13	13	4123-200-002-005	B31021
3	13	13	41232-200-002-001	B31019

07/03/27

PICKED UP BY / RECU: _____

En cas de perte ou de dommages dû a la la valeur intrinséque de certaines responsabilité se limitera à deux fois la valeur du traitement des pieces perdues ou endommagées.
Due to the intrinsic value of some parts, we are only liable for loss or damage to twice the invoiced finishing costs.

TNM

ANODISATION et PEINTURE TNM INC.

C. OF C

21 chemin de l'Aviation,Pointe Claire QC H9R 4Z2
Telephone: (514) 429-7777 Fax: (514) 429-5108
Certifié ISO 9001-2000 / AS9100 certified
approuvé NADCAP approved

54032

23-Mar-2007

CLIENT / CUSTOMER:

DART AEROSPACE LTD.
1270 ABERDEEN STREET
HAWKESBURY , ONTARIO
K6A 1K7

CERTIFICATE OF COMPLIANCE
CERTIFICAT DE CONFORMITE

PURCHASE ORDER/ NO. DE COMMANDE: 00003360

1	9	9	41232-200-002-003	B31020	REV: A BLACK ANODIZE PER MIL-A-8625F1 TYPE I CLASS 2
2	13	13	4123-200-002-005	B31021	REV: A BLACK ANODIZE PER MIL-A-8625F1 TYPE I CLASS 2
3	13	13	41232-200-002-001	B31019	REV: A BLACK ANODIZE PER MIL-A-8625F1 TYPE I CLASS 2

REQUIREMENTS HAVE BEEN IN ACCORDANCE WITH MD-INC P.R.I.D.E. MANUAL

Nous certifions que les pièces énumérées ont été traitées, testées et inspectées selon les spécifications mentionnées.
Les cartes de travail ont été remplies et sont disponibles pour consultation, sur demande.

All parts are processed, tested, and inspected to the requirements of above specifications.
Travel cards have been filed and are available for viewing upon request.

Signature/Signed:

Directeur de la Qualité / Q.A. Manager